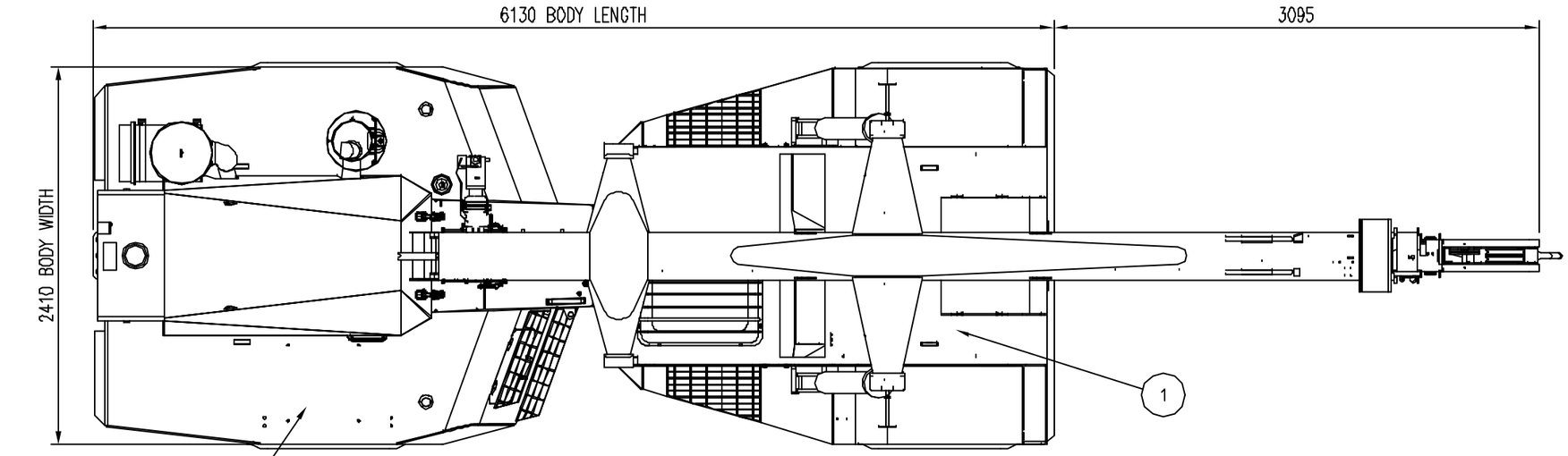

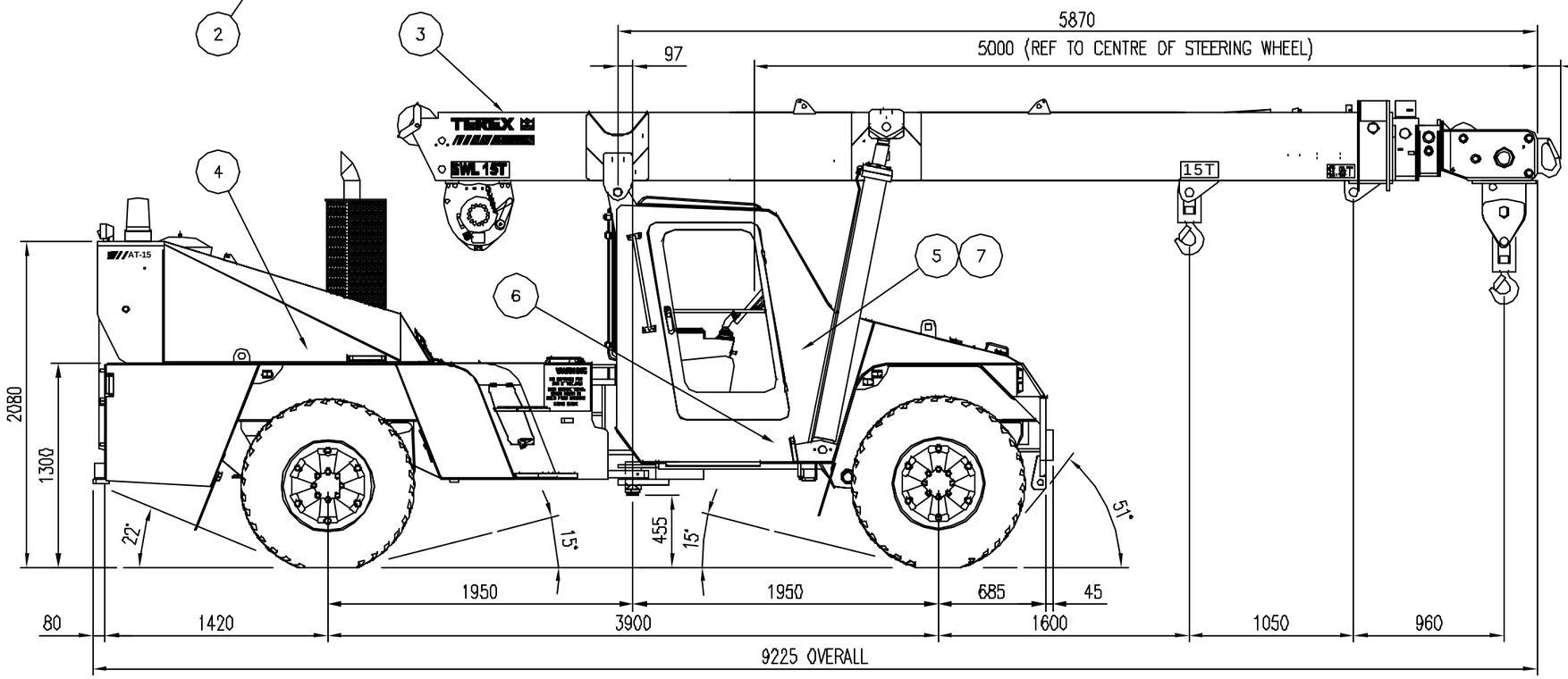

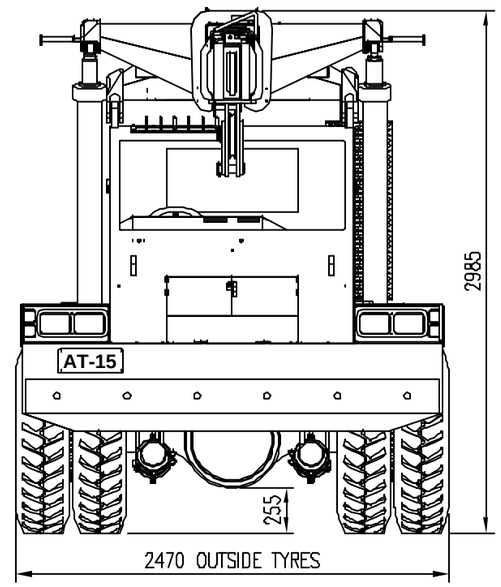

NOMINAL TARE
FRONT : 6 000 kg
REAR : 10 000 kg
TOTAL : 16 000 kg

TURNING RADIUS : 6600mm

TYRES 11.00 x 20

REV	CHANGE DETAILS	CHG No.	BY	INTER	DATE

UNLESS OTHERWISE STATED ALL WELDING TO AS1554 CATEGORY SP AND ALL DIMENSIONS IN (mm) & TOLERENCED TO LIMITS SHOWN.

NOMINAL SIZE	UP TO 150	ABOVE 150 UP TO 300	ABOVE 300 UP TO 1000	ABOVE 1000
MACHINING	±0.1	±0.25	±0.5	±1.0
FABRICATION	±0.5	±1.0	±1.5	±2.5

AS 1100
DO NOT SCALE
SHEET SIZE A3
SCALE 1:35

DATE	8/9/04
DRN	NHW
CKD	
APPD	

FRANNA CRANES PTY LTD
A.C.N. 010 571 048
MOBILE CRANE MANUFACTURERS

Title
AT-15 CRANE
WITH OM906 2000
AT-15 SERIES II

DRG No. 15-A-1-001
REV –

THIS DRAWING SHALL REMAIN THE SOLE PROPERTY OF FRANNA CRANES PTY. LTD. & MUST NOT BE COPIED OR DISCLOSED WITHOUT THEIR WRITTEN APPROVAL.

PRODUCT No. : 15A1001–

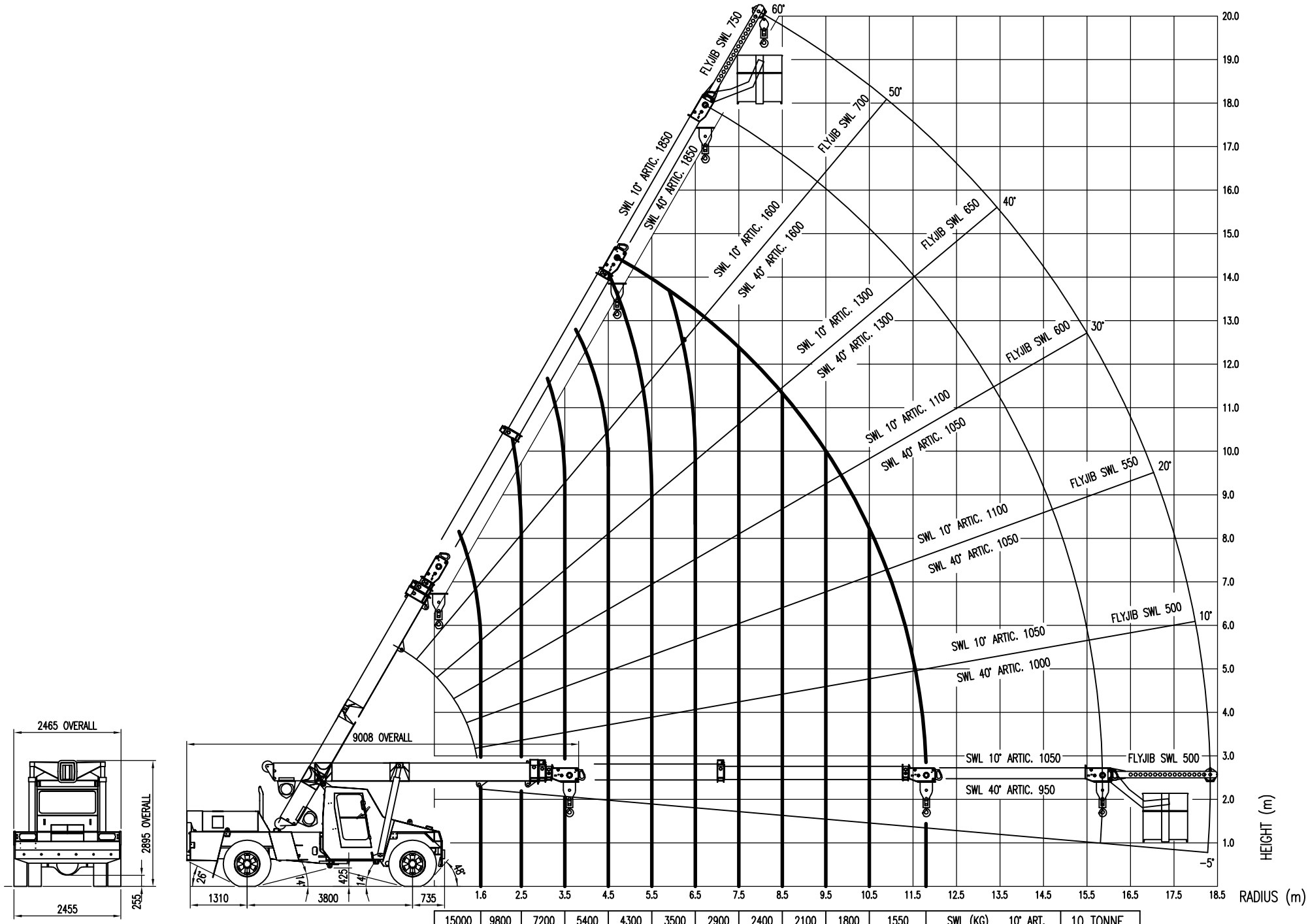

15000	9800	7200	5400	4300	3500	2900	2400	2100	1800	1550	SWL (KG)	10° ART.	10 TONNE
14000	8800	6300	4800	3800	3000	2500	2100	1800	1600	1350	SWL (KG)	40° ART.	REAR AXLE